Simple HID steering wheel project: (Firmware)

Github

Hi, this is a project I had spent a few days learning new concepts such as HID (Human Interface Device) such that the microcontroller could directly communicate to the PC and make it appear as a controller to play games on!

Items you will need for this project:

List Of Items

The Raspberry Pico is exchangeable with Arduino pro micro or Leonardo based on availability

The Raspberry Pi Pico is the brain of our project it will handle the communication between the PC and the sensors (AS5600)

The Pico will receive the values from our sensors and then send them to the PC in the form of axes x, y, z, rx for Steering, Accelerator, brake, and clutch respectively. The clutch is optional as I don't have it in my prototype or final version, and you can always add it later if you want.

Wiring:

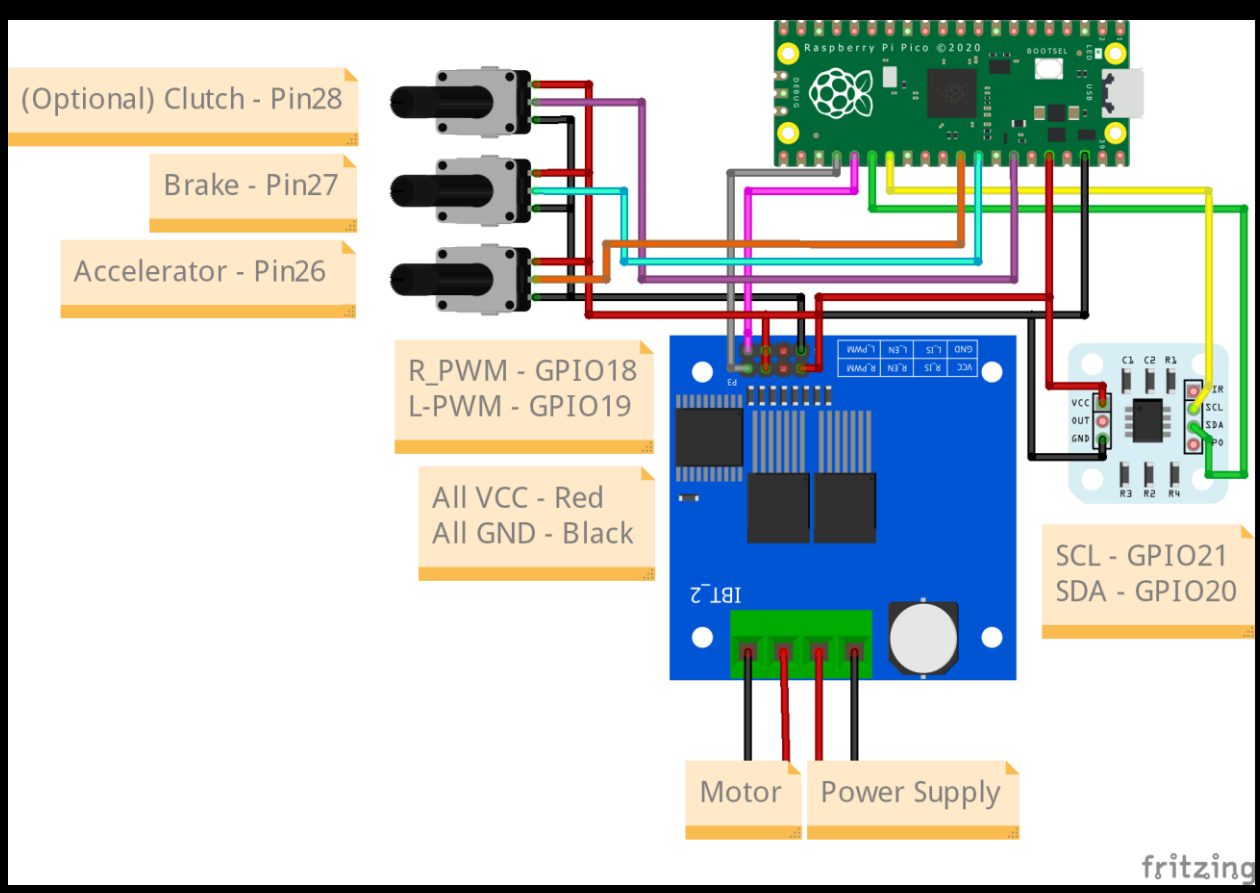

As you can see, this is the wiring for the steering wheel for Pico. PiPicoSimpleGithub

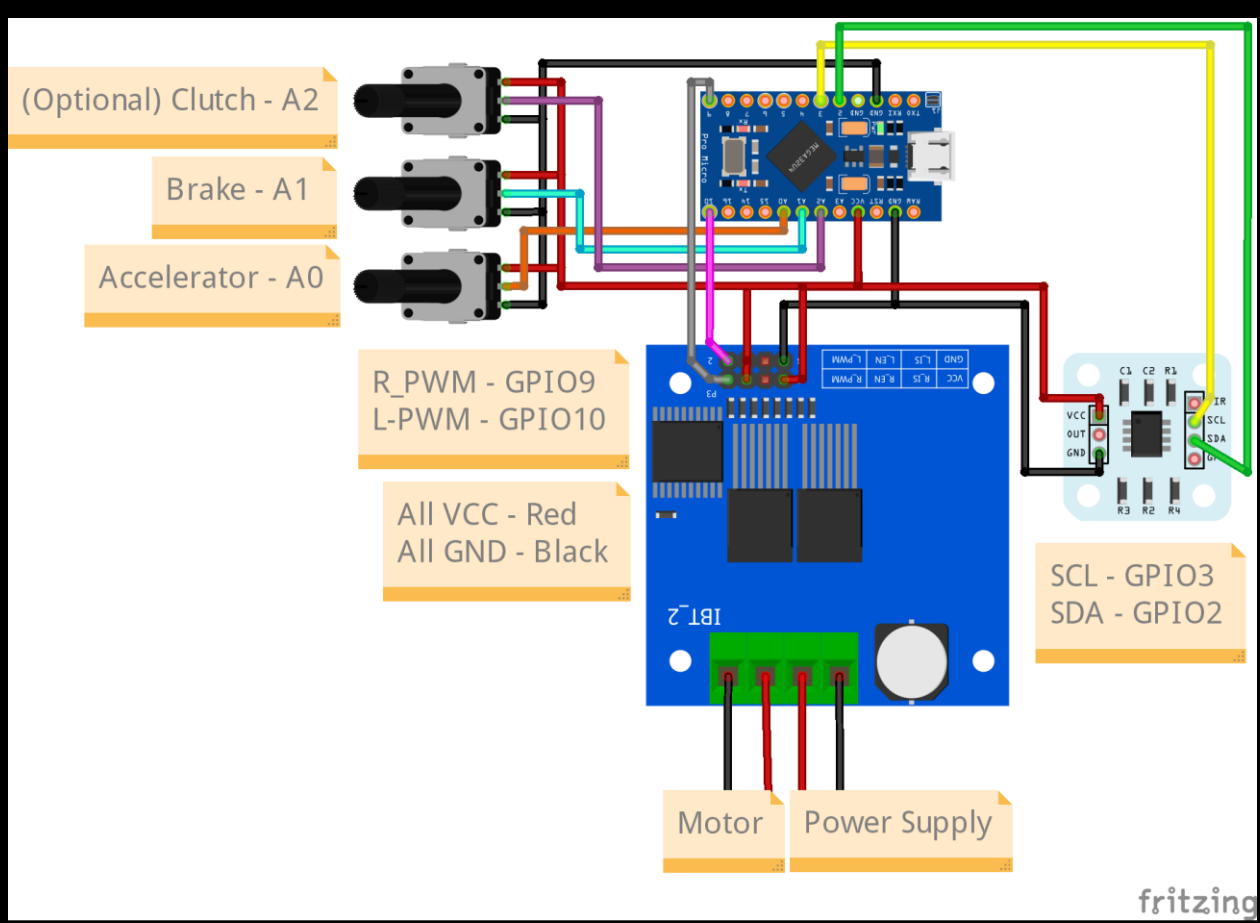

And this is for pro micro. MicroSimpleGithub

Code:

First before the code we must install some libraries and Raspberry Pi rp2040 Arduino core in Arduino ide.

Rp2040 Core installation:

First got to Tools -> Boards -> Boards Manager

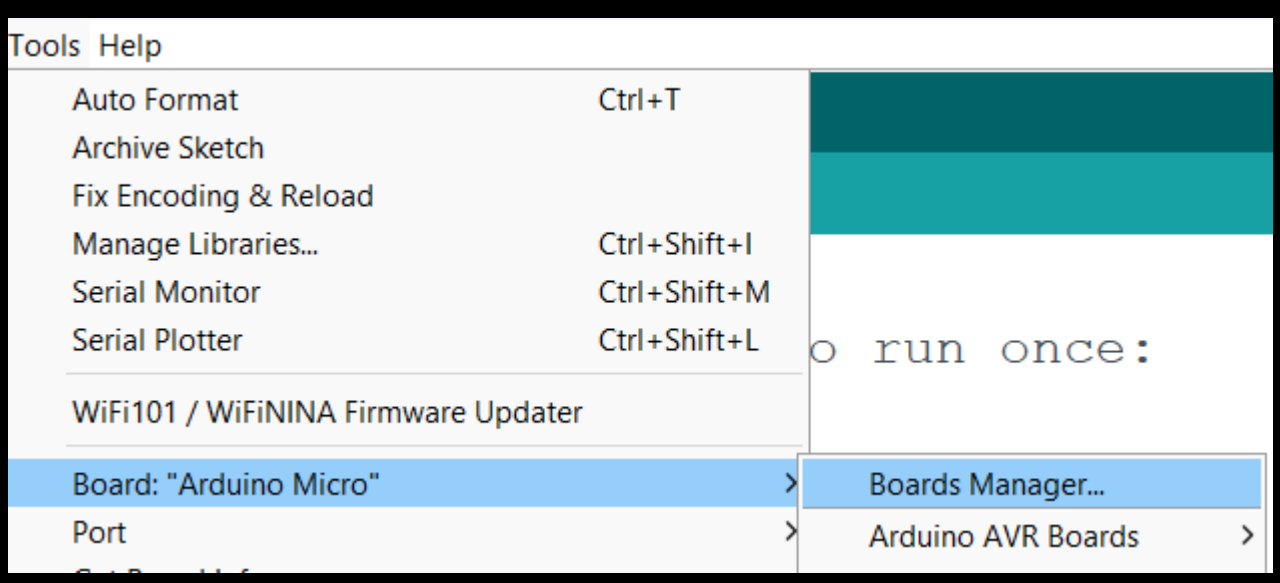

After clicking on it search for RP2040 and install the latest one from Earl F. Philhower

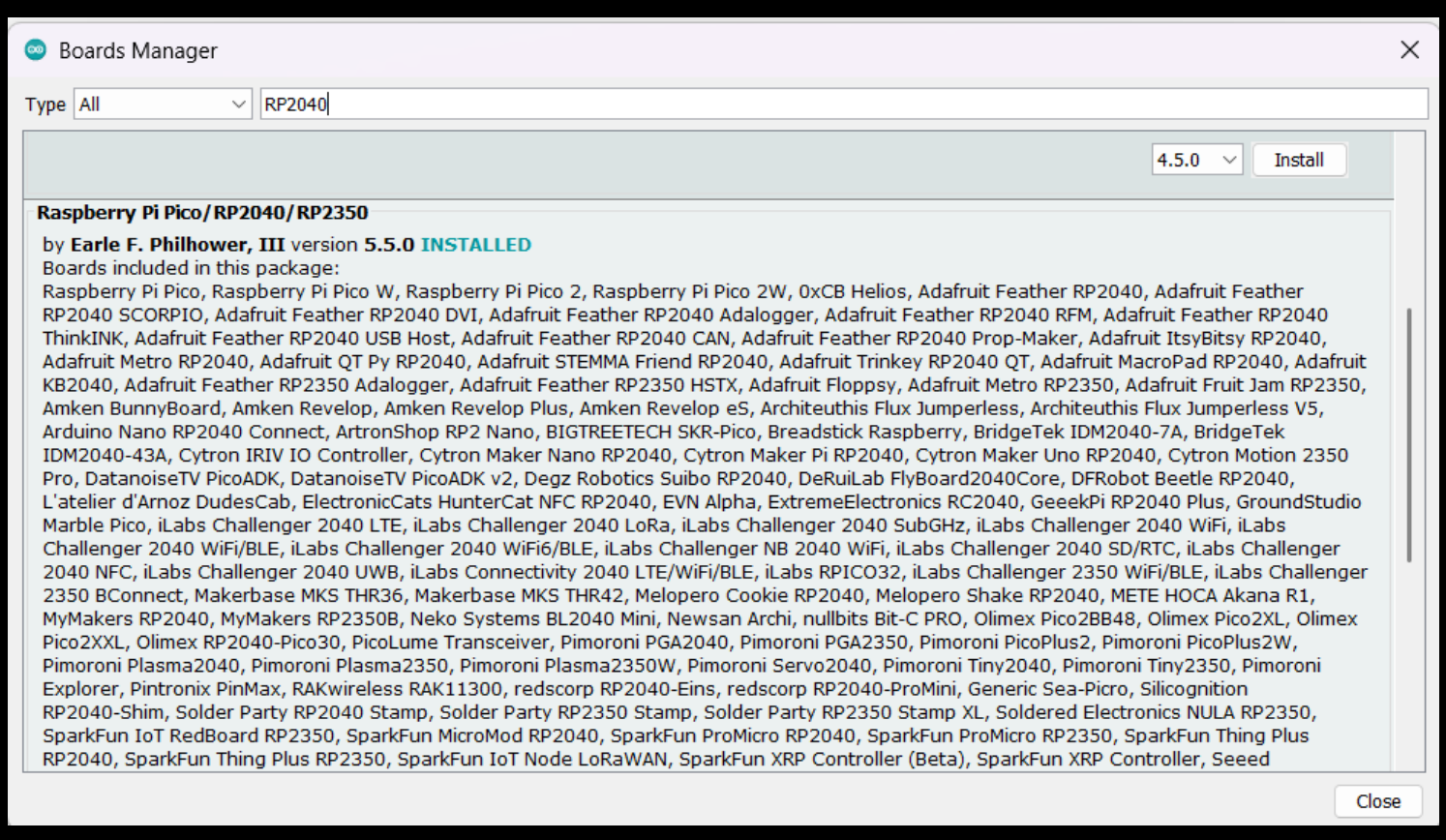

Installing Libraries:

We must install 2 key libraries

(1) AS5600 Library
(2) AdafruitTinyUSB (Pico) or Joystick (Micro)

[AS5600 Library]

[AdafruitTinyUSB Library]

[Joystick Library]

After downloading the above libraries got to Sketch -> Include Library -> Add .ZIP Library

And select the downloaded libraries

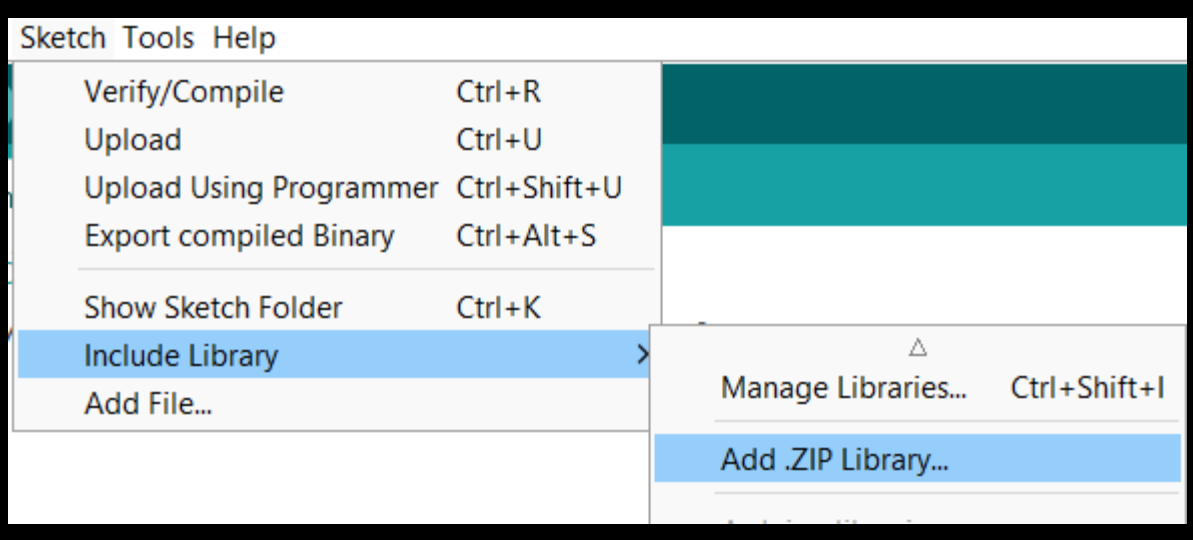

After all this we can upload the code to respective devices

[Pi Pico Code]

[Pro Micro Code]